HGT-100(EN3) Hydraulic patch fitting

According to EN1154:1996-11 + A1:2002-12+AC:2006-06

Recommendation

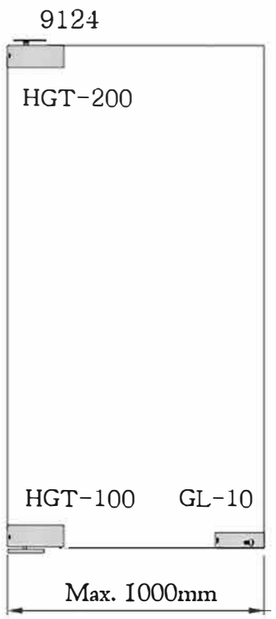

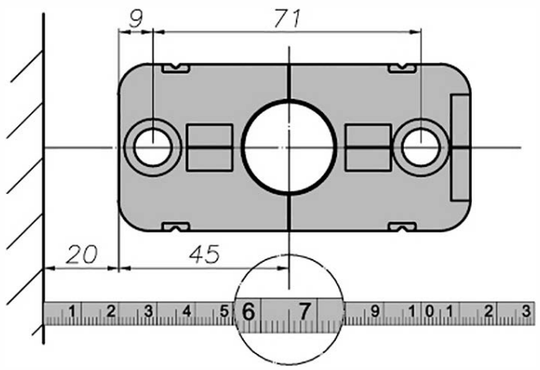

Glass Cutout(HGT-100/HGT-100H):

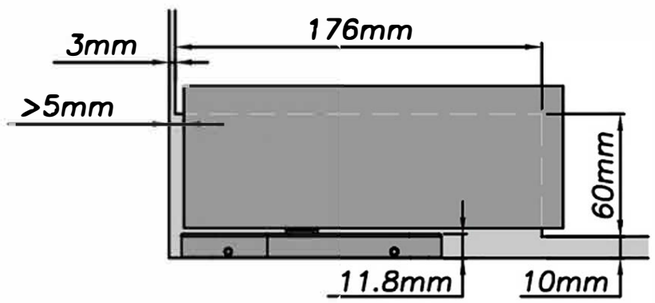

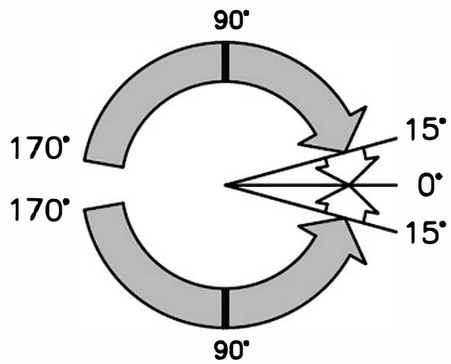

Application Ranges:
- Suitable for single & double action door.
- Available for light & medium duty door.
- Adjustable Closing & Latching Speed.
- Two non-critical control valves provide dual speed hydraulic closing.

Finishes:
- PSS:Polished stainless steel.
- SSS:Satin hairline stainless steel.
- MBK (mat black) / MS (mat silver) by order.

Power Size	3
• Max. door width (mm)	1000
• Max. door weight (kg)	100
• Available glass thickness (mm)	**10~12**

HGT-100H(EN5) Heavy duty type NEW

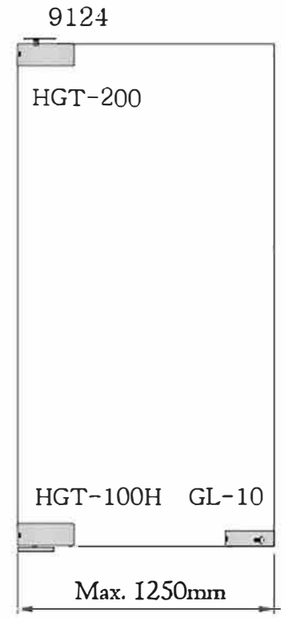

Finishes:
- PSS:Polished stainless steel.
- SSS:Satin hairline stainless steel.
- MBK (mat black) / MS (mat silver) by order.

Power Size	EN5
• Max. door width (mm)	1250
• Max. door weight (kg)	110
• Available glass thickness (mm)	**10~13.5**

HGT-100W Designed for wood panel

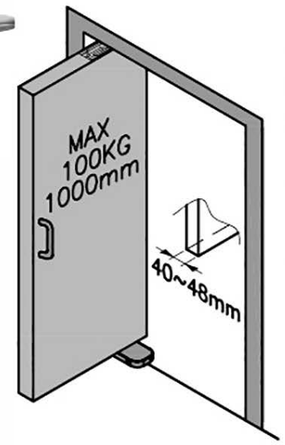

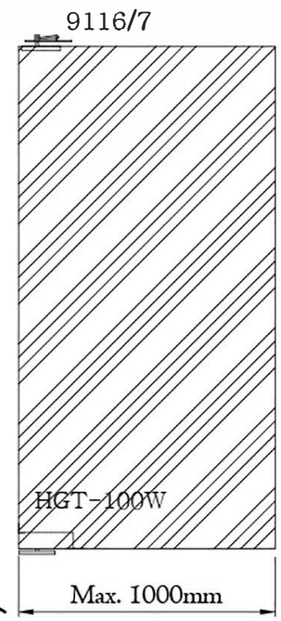

Product Features:
- Fixed power size 3 EN compliance.
- Adjustable closing & latching speed.
- Maximum door opening angle at 150°.
- Maximum door control opening angle at 150°.
- Mechanical hold-open at 90°.
  (optional upon request)

Power Size	3
• Max door width (mm)	1000
• Max door weight (kg)	100
• Minimum timber door thickness (mm)	40